BILL OF MATERIAL			
DRAWING NUMBER	ITEM NUMBER	NUMBER REQD	DESCRIPTION

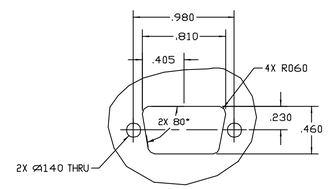

DETAIL A
SCALE 2.000

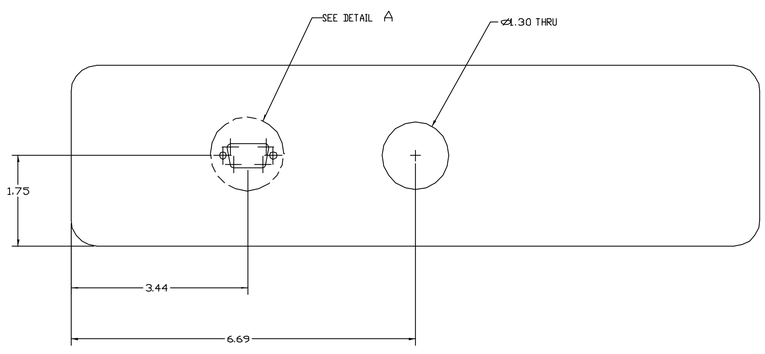

104 / D4 RIGHT REAR FEEDTHRU PANEL
MAT'L: PANEL REMOVED FROM 'HOFFMAN' BASE # P-B188HF

GENERAL NOTES (unless otherwise noted)

1. ALL DIMENSIONS ARE IN INCHES
2. DIMENSIONING AND TOLERANCING PER ANSI Y14.5M-1982
3. REMOVE ALL BURRS AND BREAK SHARP EDGES, INCLUDING HOLES .015 MAX
4. ALL INSIDE (FILLET) RADII TO BE .015 MAX
5. COUNTERSINK 82 DEGREES ALL TAPPED HOLES TO MAJOR DIAMETER
6. ALL DIAMETRAL FEATURES SHOWN ON A COMMON AXIS SHALL BE COAXIAL WITHIN A CYLINDRICAL TOLERANCE ZONE THAT HAS A DIAMETER EQUAL TO THE AVERAGE OF THEIR TOTAL SIZE TOLERANCE
7. WELDING SYMBOLS PER ANSI/AWS A2.4-1986
8. SURFACE TEXTURE PER ANSI/ASME B46.1-1985 AND SURFACE TEXTURE SYMBOLS PER ANSI Y14.36-1978
9. DO NOT SCALE DRAWING FOR DIMENSIONS

ZONE	REV	DESCRIPTION	DATE	CHANGED BY	CHECKED BY	APPROVED BY

Los Alamos
Los Alamos National Laboratory
Los Alamos, New Mexico 87545

CAD FILE NAME:
kmilder\pro_dir\macarthur\pps\128y-271036.drw

	SIGNATURE	DATE	GROUP
ORIGINATED	D. MACARTHUR	10/99	NIS-6
DRAWN	B. MILDER	8/14/00	NIS-6
CHECKED	–	–	–
PROJ. ENGR.	–	–	–
APPROVED	–	–	–
RELEASED	–	–	–

CLASSIFICATION OF DRAWING: UNC
PART: UNC TITLE BLOCK: UNC

TITLE:
FMTTD SYSTEM
RACK

RIGHT REAR
FEEDTHRU PANEL DETAIL

TOLERANCE-UNLESS OTHERWISE NOTED
X=±-- 0.XX=± .01 ANGULAR=± 0°30'
0.X=±.1 0.XXX=±.005 FINISH: 63

SCALE	TOTAL SHEETS	DRAWING NO.	SHEET SIZE	SHEET NO.
1/1	--	128Y-271036	D	18