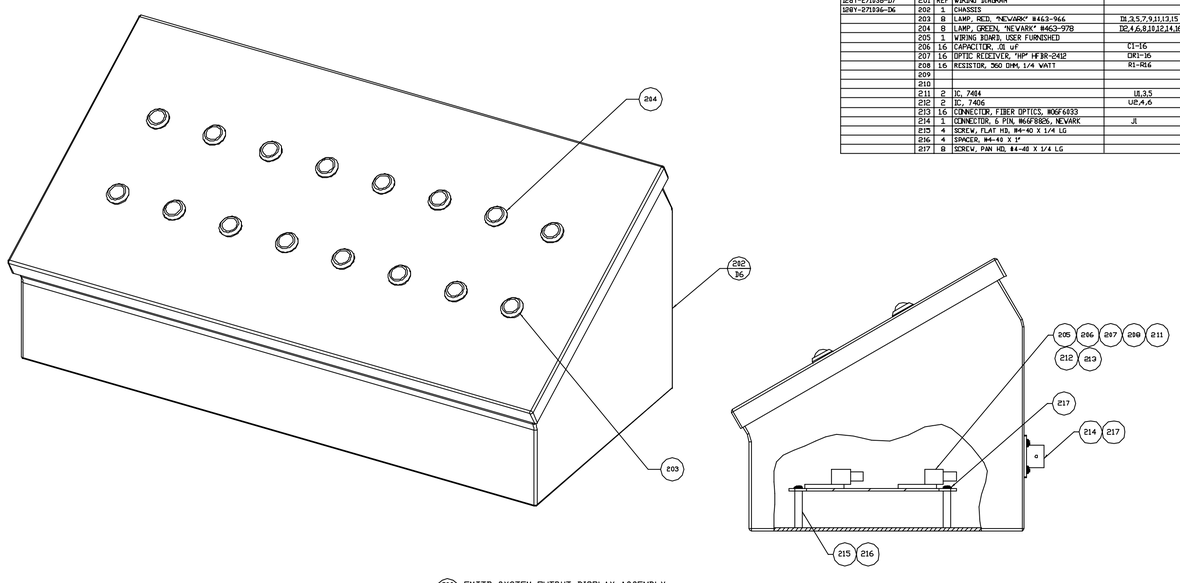

FMTTD SYSTEM OUTPUT DISPLAY ASSEMBLY

SECTION A-A
SCALE 1.000

DRAWING NUMBER	ITEM NUMBER	NUMBER REQD	BILL OF MATERIAL DESCRIPTION	REF DES
	200	1	OUTPUT DISPLAY ASSEMBLY	
128Y-271036-D7	201	REF	WIRING DIAGRAM	
128Y-271036-D6	202	1	CHASSIS	
	203	8	LAMP, RED, "NEVARK" #463-966	D1,3,5,7,9,11,13,15
	204	8	LAMP, GREEN, "NEVARK" #463-978	D2,4,6,8,10,12,14,16
	205	1	WIRING BOARD, USER FURNISHED	
	206	16	CAPACITOR, .01 uF	C1-16
	207	16	OPTIC RECEIVER, "HP" HFBR-2412	OR1-16
	208	16	RESISTOR, 360 OHM, 1/4 WATT	R1-R16
	209			
	210			
	211	2	IC, 7414	U1,3,5
	212	2	IC, 7406	U2,4,6
	213	16	CONNECTOR, FIBER OPTICS, MOSF6933	
	214	1	CONNECTOR, 6 PIN, M66F8826, NEVARK	J1
	215	4	SCREW, FLAT HD, #4-40 X 1/4 LG	
	216	4	SPACER, #4-40 X 1"	
	217	8	SCREW, PAN HD, #4-40 X 1/4 LG	

ZONE	REV	DESCRIPTION	DATE	DRAWN BY	CHECKED BY	APPROVED BY

Los Alamos
Los Alamos National Laboratory
Los Alamos, New Mexico 87545

CAD FILE NAME:
/usr/pro/d/home/ftta/128y-271036.prt

	SIGNATURE	DATE	GROUP
DESIGNED	V. JENSEN	12-99	N13-6
DRAWN	C. ROMERO	3/20/99	N13-6
CHECKED	-	-	-
FACIL ENGR.	-	-	-
APPROVED	-	-	-
RELEASED	-	-	-

CLASSIFICATION OF DRAWING: UNC
PARTS: UNC TITLE BLOCK: UNC

TITLE: FMTTD SYSTEM OUTPUT DISPLAY

ASSEMBLY

TOLERANCE-UNLESS OTHERWISE NOTED
X ±0.** 0.XX±0.** ANGULAR±0.**
0.XX±0.** 0.XXX±0.** FRACT±0.**

SCALE 1/1 | SHEET 1 OF 1 | DRAWING NO. 128Y-271036 | SIZE D | REV 5