Tungsten Iris Controller

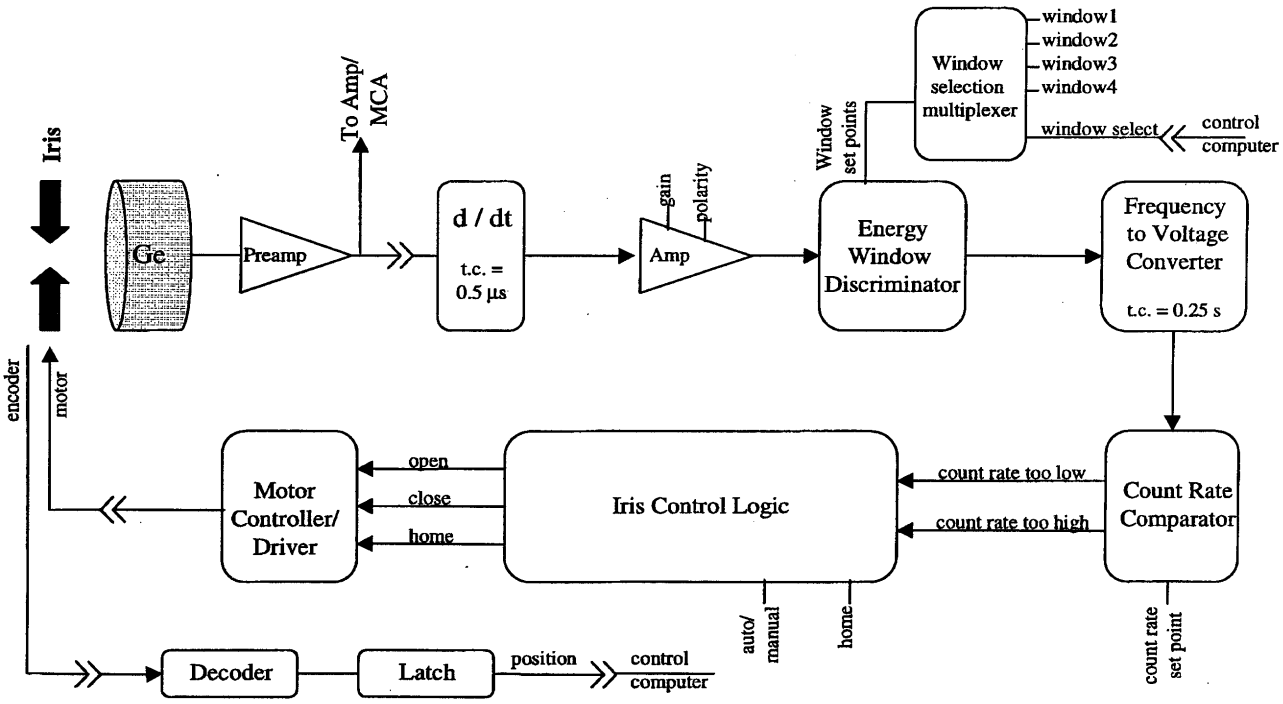

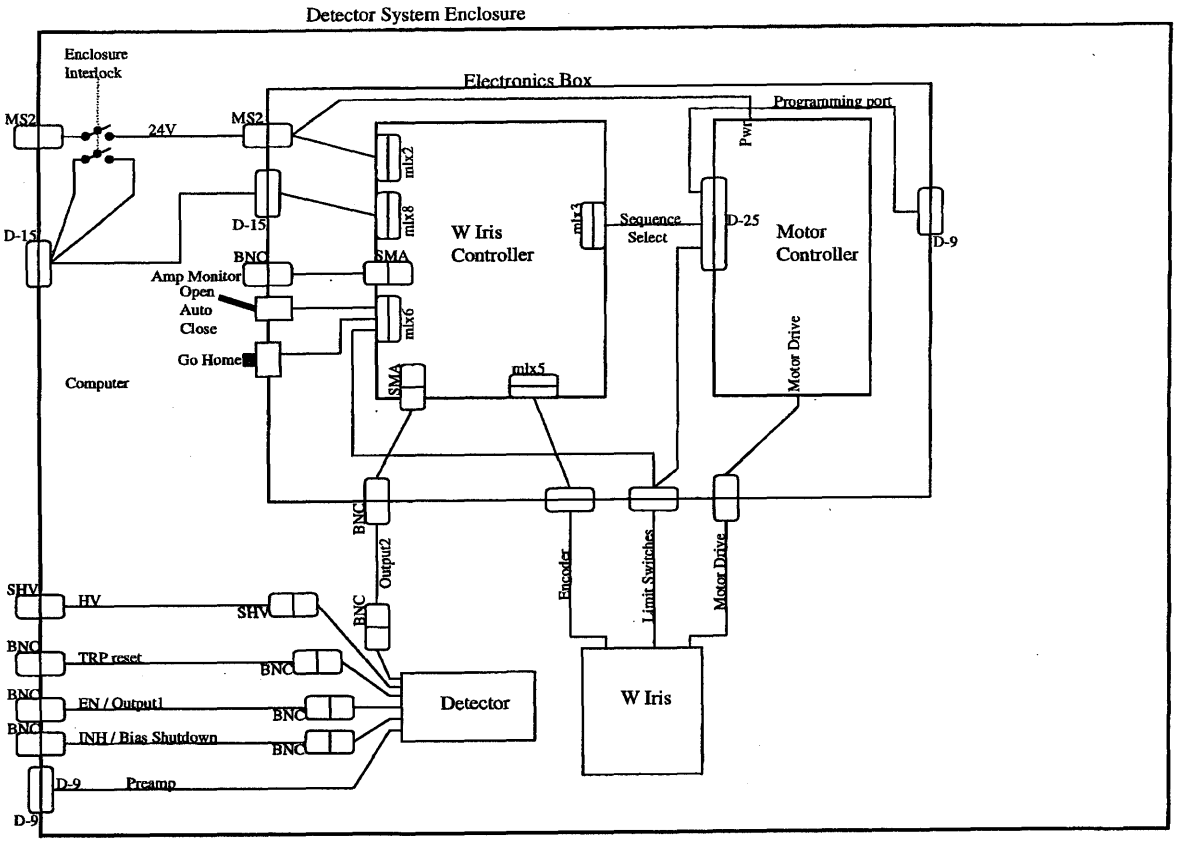
Detector System Enclosure
Enclosure Interlock
Electronics Box
Programming port
MS2
24V
MS2
Pwr
mlx2
mlx8
D-15
D-15
W Iris Controller
mlx3
Sequence Select
D-25
Motor Controller
D-9
BNC
SMA
Amp Monitor
Open
Auto
Close
mlx6
Go Home
Computer
SMA
mlx5
Motor Drive
BNC
Output2
Encoder
Limit Switches
Motor Drive
SHV
HV
SHV
BNC
BNC
TRP reset
BNC
BNC
EN / Output1
BNC
BNC
INH / Bias Shutdown
BNC
Detector
W Iris
D-9
Preamp
D-9

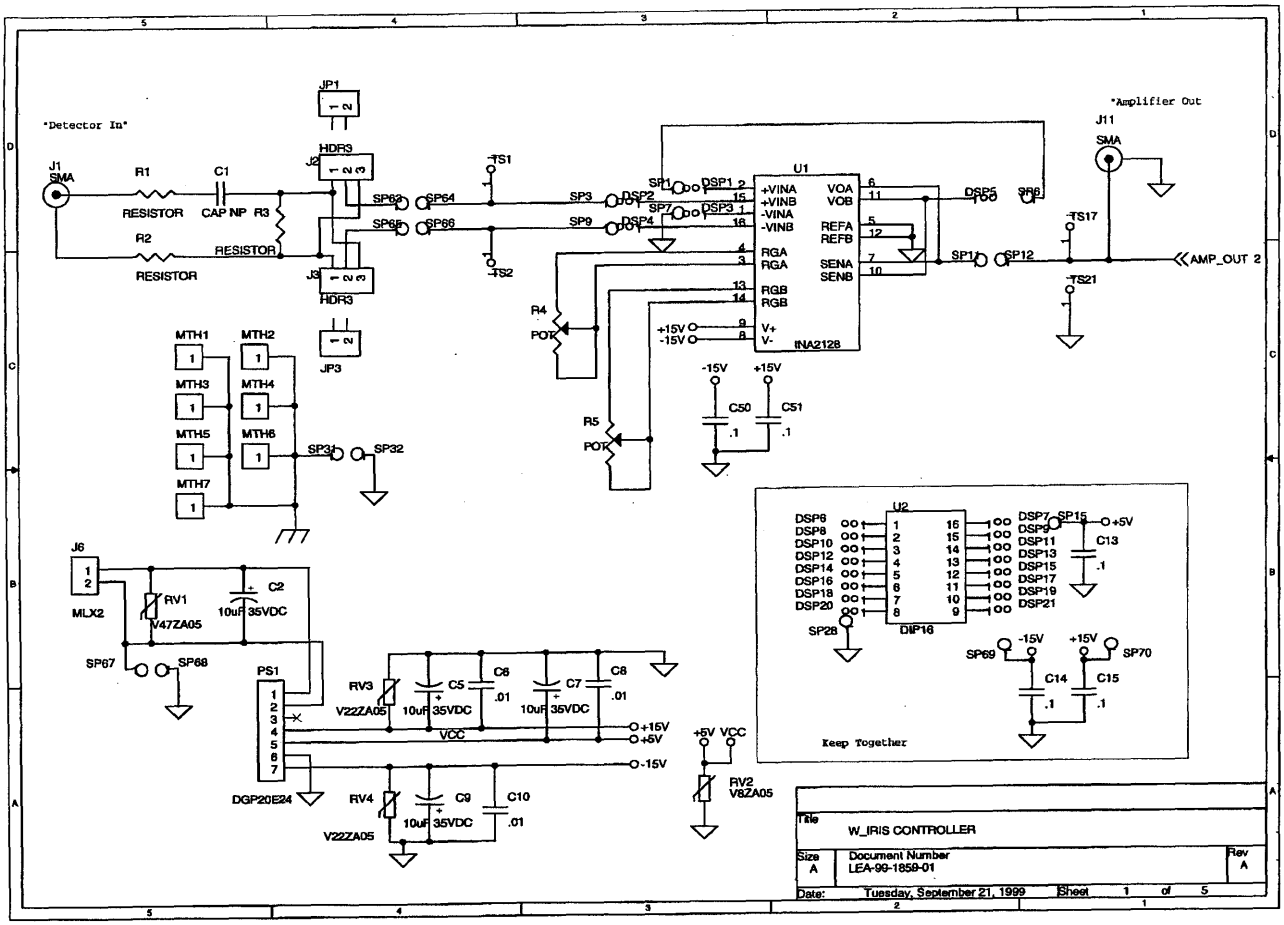
"Detector In"
J1
SMA
R1
RESISTOR
C1
CAP NP
R3
R2
RESISTOR
RESISTOR
JP1
HDR3
J2
J3
HDR3
JP3
SP62
SP64
SP65
SP66
TS1
TS2
SP3
SP9
SP1
SP7
DSP1
DSP2
DSP3
DSP4
U1
+VINA
+VINB
-VINA
-VINB
RGA
RGA
RGB
RGB
V+
V-
VOA
VOB
REFA
REFB
SENA
SENB
INA2128
R4
POT
R5
POT
+15V
-15V
C50
C51
.1
.1
DSP5
SP6
SP11
SP12
TS17
TS21
"Amplifier Out
J11
SMA
AMP_OUT 2
MTH1
MTH2
MTH3
MTH4
MTH5
MTH6
MTH7
SP31
SP32
J6
MLX2
RV1
V47ZA05
C2
10uF 35VDC
SP67
SP68
PS1
DGP20E24
RV3
V22ZA05
C5
10uF 35VDC
C6
.01
C7
10uF 35VDC
C8
.01
VCC
+15V
+5V
-15V
RV4
V22ZA05
C9
10uF 35VDC
C10
.01
+5V VCC
RV2
V8ZA05
U2
DIP16
DSP6
DSP8
DSP10
DSP12
DSP14
DSP16
DSP18
DSP20
DSP7
DSP9
DSP11
DSP13
DSP15
DSP17
DSP19
DSP21
SP15
+5V
C13
.1
SP28
SP69
-15V
+15V
SP70
C14
C15
.1
.1
Keep Together
Title
W_IRIS CONTROLLER
Size
A
Document Number
LEA-99-1859-01
Rev
A
Date:
Tuesday, September 21, 1999
Sheet
1
of
5

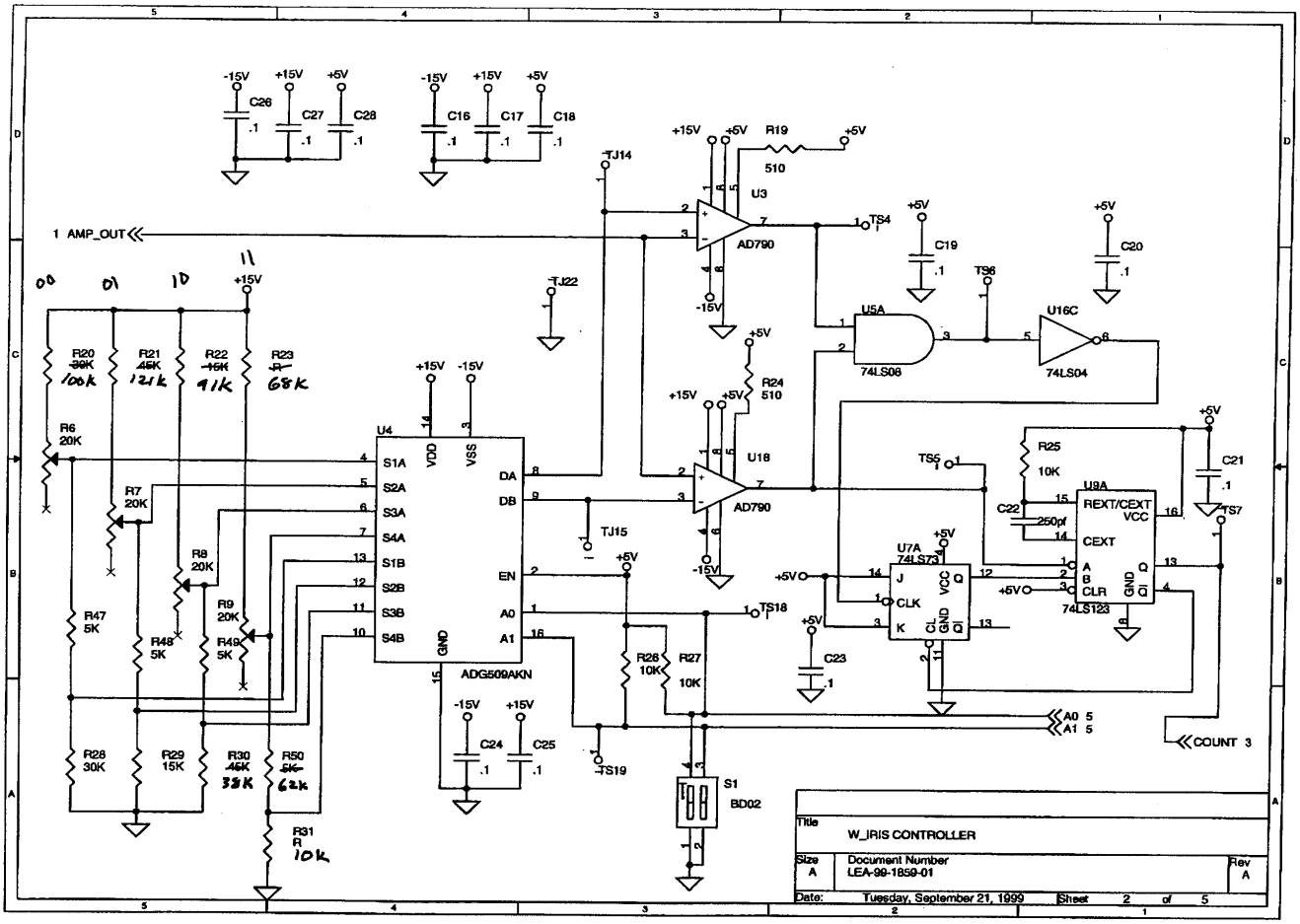

1 AMP_OUT
U3
AD790
U18
AD790
U4
ADG509AKN
U5A
74LS08
U16C
74LS04
U7A
74LS73
U9A
74LS123
S1
BD02
R19
510
R24
510
R25
10K
R26
10K
R27
10K
R28
30K
R29
15K
R30
45K
38K
R50
5K
62k
R31
R
10k
R20
30K
100k
R21
45K
121k
R22
15K
91k
R23
R
68K
R6
20K
R7
20K
R8
20K
R9
20K
R47
5K
R48
5K
R49
5K
C16
C17
C18
C19
C20
C21
C22
250pf
C23
C24
C25
C26
C27
C28
TJ14
TJ15
TJ22
TS4
TS5
TS6
TS7
TS18
TS19
A0 5
A1 5
COUNT 3
Title
W_IRIS CONTROLLER
Size
A
Document Number
LEA-99-1859-01
Rev
A
Date: Tuesday, September 21, 1999
Sheet 2 of 5

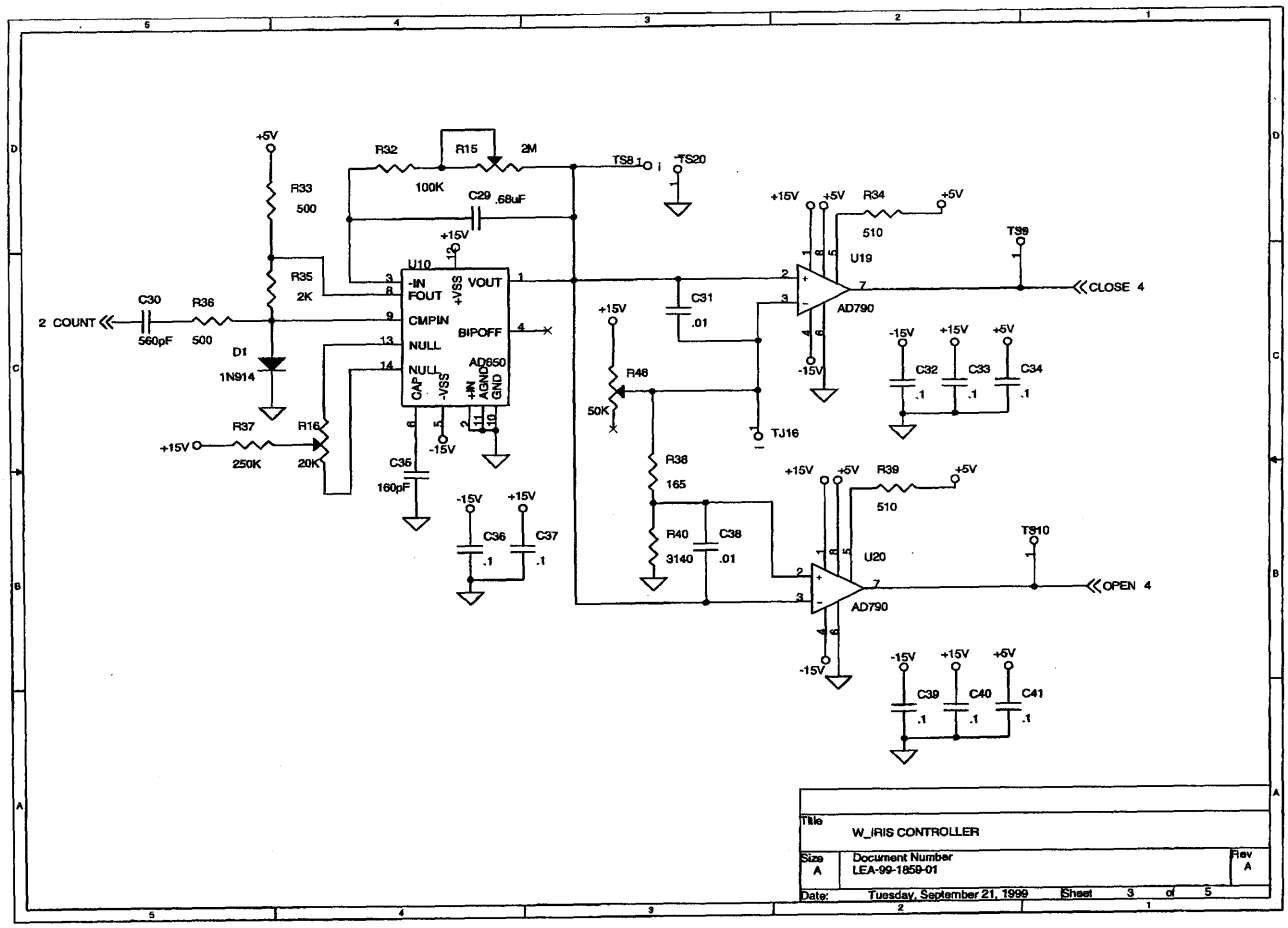
+5V
R33
500
R35
2K
R32
100K
R15
2M
C29 .68uF
TS8
TS20
+15V
U10
-IN
FOUT
CMPIN
NULL
NULL
CAP
+VSS
VOUT
BIPOFF
AD650
-VSS
+IN
AGND
GND
2 COUNT
C30
560pF
R36
500
D1
1N914
R37
250K
R16
20K
C35
160pF
-15V
C36 .1
C37 .1
C31 .01
R46
50K
TJ16
R38
165
R40
3140
C38 .01
+15V
+5V
R34
510
U19
AD790
TS9
CLOSE 4
C32 .1
C33 .1
C34 .1
R39
510
U20
AD790
TS10
OPEN 4
C39 .1
C40 .1
C41 .1
Title
W_IRIS CONTROLLER
Size A
Document Number
LEA-99-1859-01
Rev A
Date: Tuesday, September 21, 1999
Sheet 3 of 5

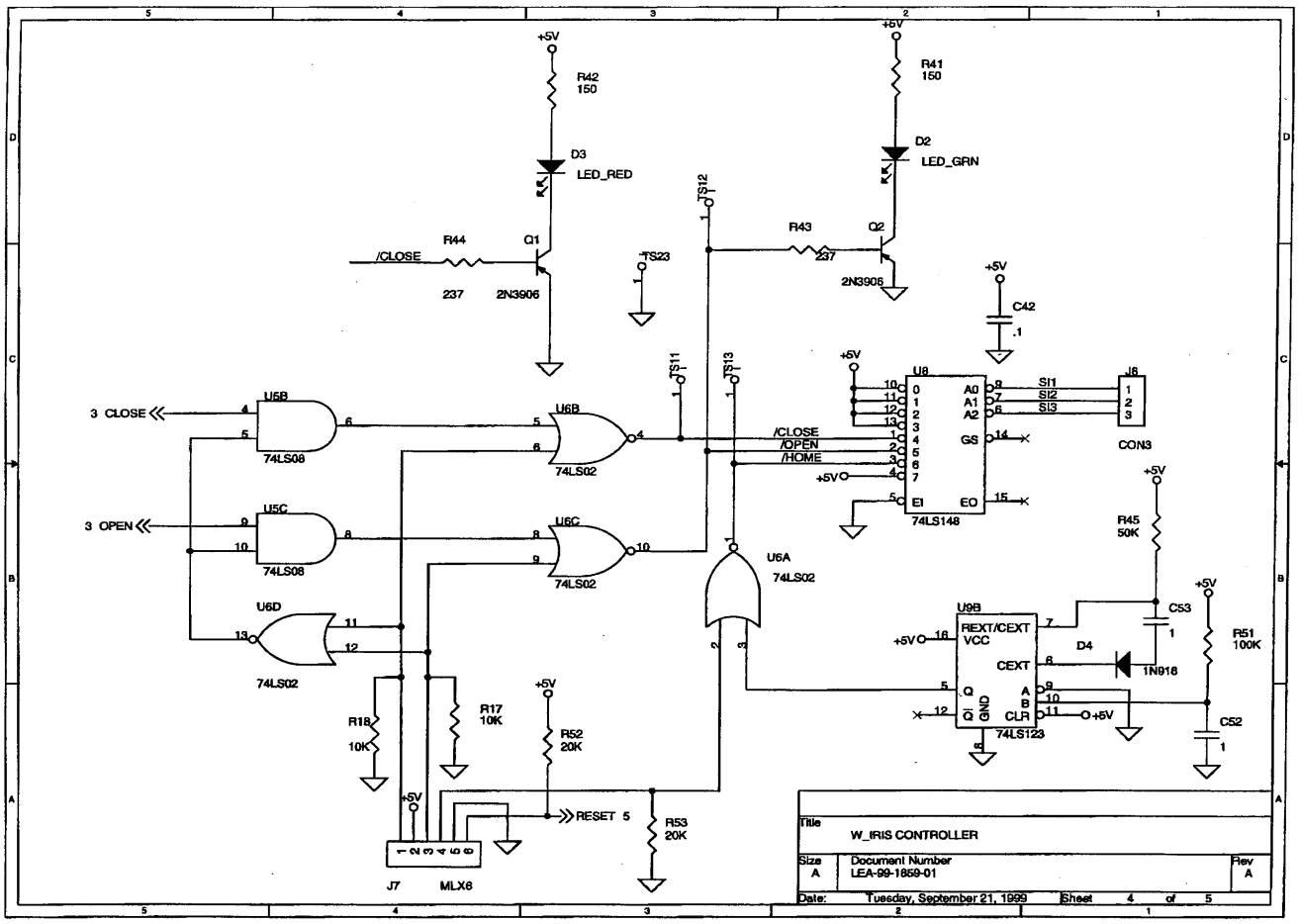
+5V
R42
150
D3
LED_RED
R41
150
D2
LED_GRN
R44
/CLOSE
Q1
237
2N3906
TS23
TS12
R43
237
Q2
2N3906
C42
.1
TS11
TS13
U8
74LS148
A0
A1
A2
GS
EI
EO
SI1
SI2
SI3
J8
CON3
3 CLOSE
U5B
74LS08
U6B
74LS02
/CLOSE
/OPEN
/HOME
3 OPEN
U5C
74LS08
U6C
74LS02
U6A
74LS02
U6D
74LS02
R45
50K
U9B
REXT/CEXT
VCC
CEXT
Q
Q
GND
A
B
CLR
74LS123
C53
D4
1N916
R51
100K
C52
R18
10K
R17
10K
R52
20K
R53
20K
RESET 5
J7
MLX6
Title
W_IRIS CONTROLLER
Size
A
Document Number
LEA-99-1859-01
Rev
A
Date:
Tuesday, September 21, 1999
Sheet
4
of
5

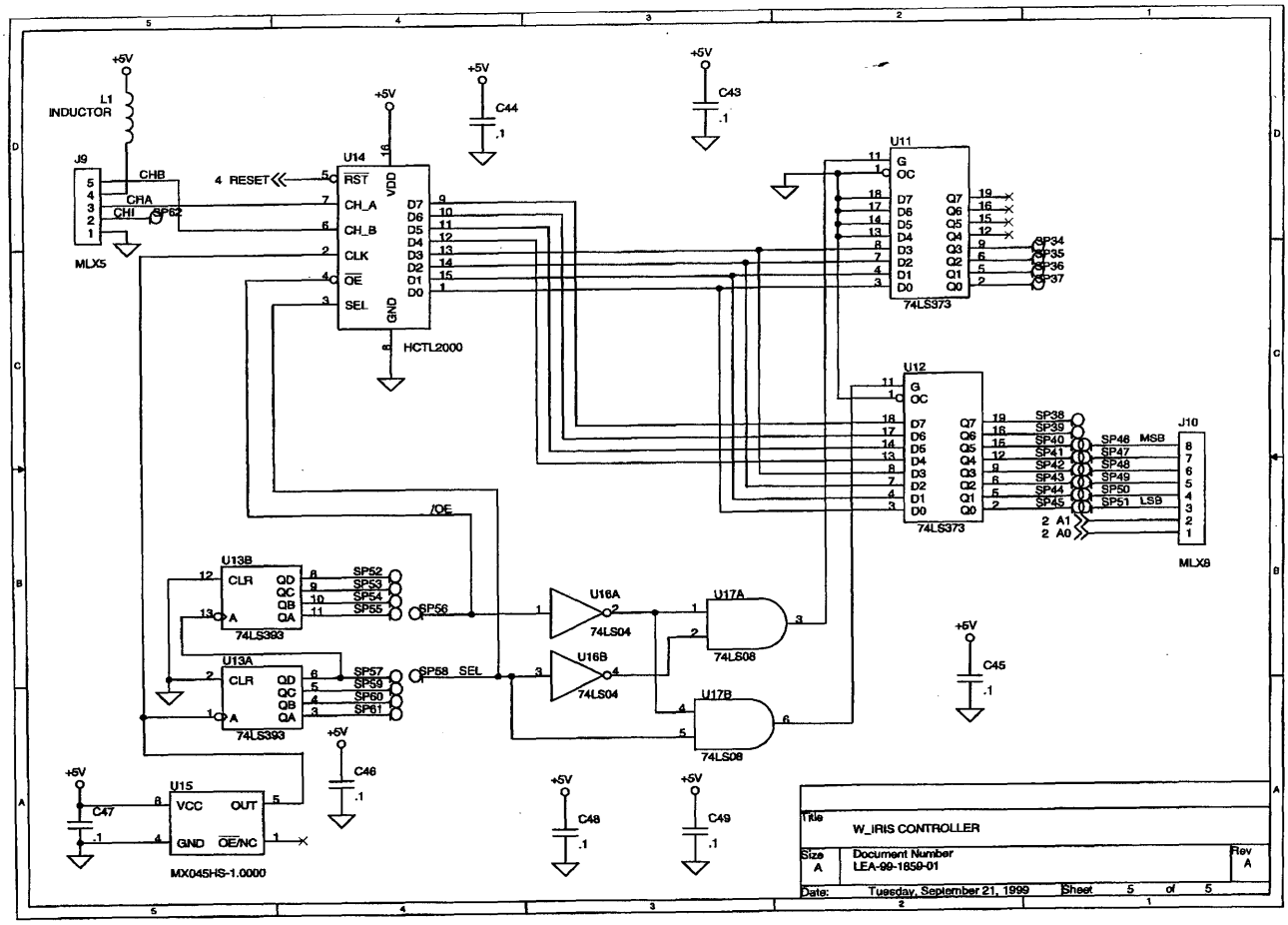
+5V
L1
INDUCTOR
J9
MLX5
CHB
CHA
CHI
SP62
4 RESET
U14
RST
CH_A
CH_B
CLK
OE
SEL
VDD
GND
D7
D6
D5
D4
D3
D2
D1
D0
HCTL2000
C44
.1
C43
.1
U11
G
OC
74LS373
SP34
SP35
SP36
SP37
U12
74LS373
SP38
SP39
SP40
SP41
SP42
SP43
SP44
SP45
SP46 MSB
SP47
SP48
SP49
SP50
SP51 LSB
2 A1
2 A0
J10
MLX8
/OE
U13B
CLR
QD
QC
QB
QA
74LS393
SP52
SP53
SP54
SP55
SP56
U13A
SP57
SP59
SP60
SP61
SP58 SEL
U16A
74LS04
U16B
U17A
74LS08
U17B
C45
.1
C46
.1
U15
VCC
OUT
GND
OE/NC
MX045HS-1.0000
C47
.1
C48
.1
C49
.1
Title
W_IRIS CONTROLLER
Size
A
Document Number
LEA-99-1859-01
Rev
A
Date:
Tuesday, September 21, 1999
Sheet
5
of
5