SECURITY WATCH DOG

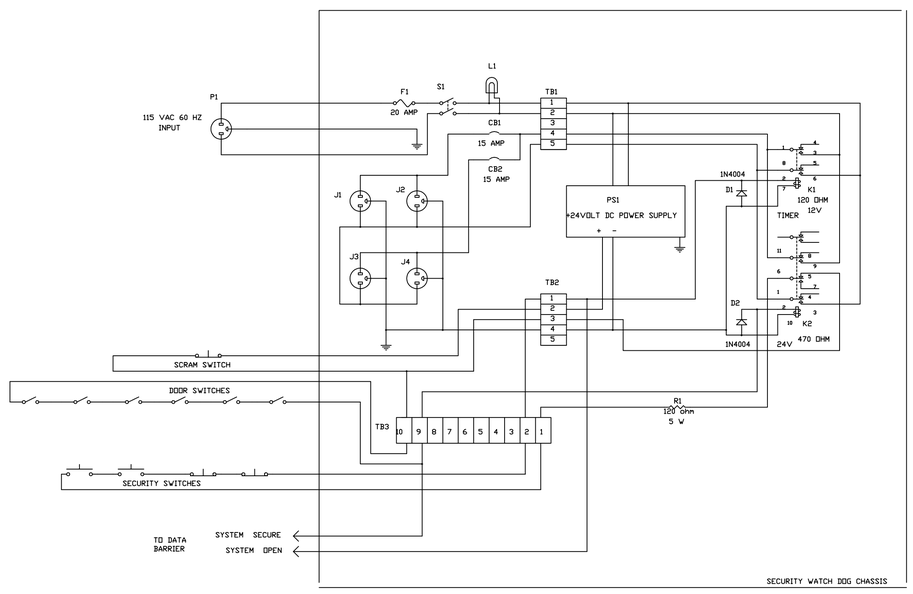

ZONE	REV	DESCRIPTION	DATE	CHANGED BY	CHECKED BY	APPROVED BY

Los Alamos

Los Alamos National Laboratory
Los Alamos, New Mexico 87545
Non-Proliferation and International Security
NIS-6

CLASSIFICATION OF: DRAWING UNC
TITLE BLOCK UNC
PART: UNC UNC

CAD FILE NAME:
FMTTD SYSTEM:NIS-SECURITY WATCH DOG MODULE-128Y-071036-D14

TITLE:
FMTTD SYSTEM
SECURITY WATCH DOG MODULE
WIRING DIAGRAM

	SIGNATURE	DATE	GROUP
ORIGINATED	MACARTHUR	10-25-99	NIS-6
DRAWN	DRANSFIELD	10-25-99	NIS-6
CHECKED	-	-	NIS-6
PROJ. ENGR.	-	-	NIS-6
APPROVED	-	-	NIS-6
RELEASED	-	-	NIS-6

SCALE	TOTAL SHEETS	DRAWING NO.	SHEET SIZE	SHEET NO.
NONE		128Y-271036	D	14